Operating Instructions

Excellence Comparator Balances

XP-L Models – Part 1

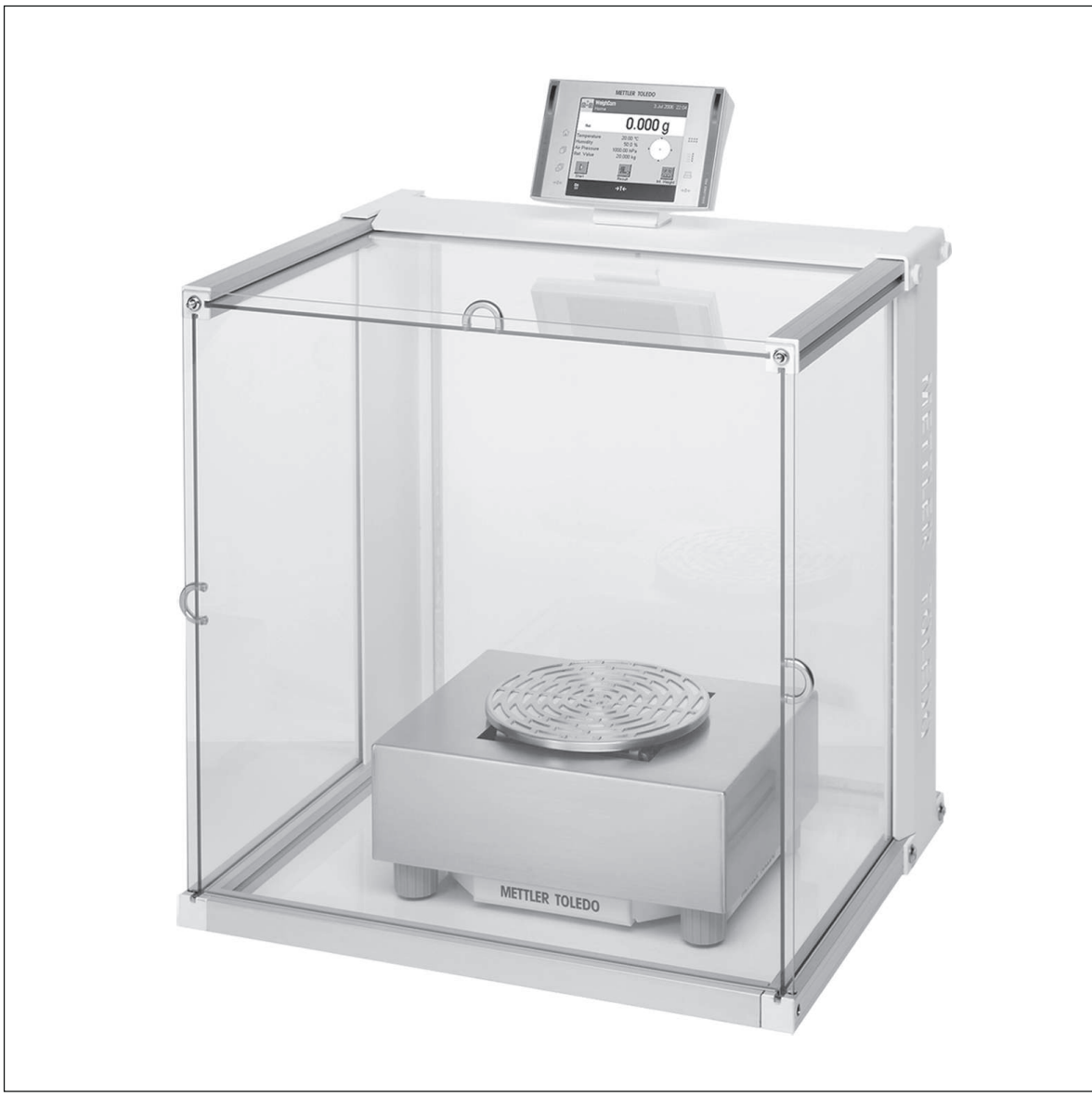

METTLER TOLEDO

Table of Contents

1 Introduction

Thank you for choosing a METTLER TOLEDO balance.

In this chapter you will be given basic information about your balance. Please read right through this chapter carefully even if you already have experience with METTLER TOLEDO balances. Please pay special attention to the safety warnings!

The different models have different characteristics regarding equipment and performance. Special notes in the text indicate where this makes a difference to operation.

The XP line comprises a range of balances which differ from each other in relation to their weighing range and resolution.

The following features are common to all models of the XP lines:

- Fully automatic adjustment "ProFACT" using internal weights.
- Built-in level sensor, illuminated level indicator and Leveling Assistant for fast and easy leveling.
- Built-in applications for WeighCom, normal weighing, statistics, formulation, piece counting, percent weighing, density, differential weighing, and LabX Client.
- Integral RS232C interface.
- Slot for second interface (optional).
- Touch-sensitive graphics terminal ("Touch screen") with color display.
- Two programmable sensors for hands-off operation ("SmartSens") to speed up frequently recurring tasks.

A brief word about standards, guidelines, and methods of quality assurance: The balances comply with usual standards and guidelines. They support standard procedures, specifications, working methods, and reports according to **GLP** (**G**ood **L**aboratory **P**ractice). In this connection, records of working procedures and adjustments become very important; for this purpose we recommend you to use a printer from the METTLER TOLEDO range, since these are optimally adapted to your balance. The balances conform to the applicable standards and guidelines and possess a EC declaration of conformity. METTLER TOLEDO is certified as manufacturer according to ISO 9001 and ISO 14001.

The operating instructions for the XP balances consist of 4 separate documents, whose contents are listed below.

Part 1, this document

Contents

- Introduction
- Safety Information
- Installation and Putting into Operation
- Leveling the Balance
- Special Settings for XP-L Comparators
- Introduction to the "WeighCom" Application
- Cleaning and Service
- Technical Data
- Accessories
- Spare Parts
- Interface Commands and MT-SICS Functions

Part 2, separate document

Contents: Terminal, System, and Applications

- Basic Principles for Using the Terminal and the Firmware
- System Settings
- User-specific Settings

- Applications
- Firmware (Software) Updates
- Error and Status Messages
- Conversion Table for Weight Units
- Recommended Printer Settings

Part 3, separate document

Contents: Adjustments, and Tests

- Adjustments
- Tests

Operating Instructions "WeighCom Application for XP Comparator Balances"

When working with the [**WeighCom**] application, use the operating instructions "WeighCom Application for XP Comparator Balances" that were included with the delivery.

Finding more information

▶ www.mt.com/excellence

Firmware version

The operating instructions are based on the initially installed terminal firmware (software) version V 3.20.

1.1 Symbols and presentations used

The following conventions apply to the operating instructions: part 1, part 2, part 3 and WeighCom application for XP comparator balances.

Key designations are indicated by a picture or text in double angular parentheses (e.g. «⊟» or «**On/Off**»).

This symbol indicates press key briefly (less than 1.5 s).

This symbol indicates press and hold key down (longer than 1.5 s).

These symbols indicate an instruction:

▶ prerequisites

1 steps

2 …

⇨ results

2 Safety Information

2.1 Definition of signal warnings and symbols

Safety notes are marked with signal words and warning symbols. These show safety issues and warnings. Ignoring the safety notes may lead to personal injury, damage to the balance, malfunctions and false results.

Signal words

WARNING	for a hazardous situation with medium risk, possibly resulting in severe injuries or death if not avoided.
CAUTION	for a hazardous situation with low risk, resulting in damage to the device or the property or in loss of data or minor or medium injuries if not avoided.
Attention	(no symbol) for important information about the product.
Note	(no symbol) for useful information about the product.

Warning symbols

General hazard

Electrical shock

Heavy object

Mandatory safety signs

Wear gloves

2.2 Product specific safety notes

Intended use

Your balance is used for weighing. Use the balance exclusively for this purpose. Any other type of use and operation beyond the limits of technical specifications without written consent from Mettler-Toledo AG, is considered as not intended.

It is not permitted to use the instrument in explosive atmosphere of gases, steam, fog, dust and flammable dust (hazardous environments).

General safety information

Your instrument meets the state of the art technology and complies with all recognized safety rules, however, certain hazards may arise in extraneous circumstances. Do not open the housing of the instrument: It does not contain any parts which can be maintained, repaired or replaced by the user. If you ever have problems with your instrument, contact your authorized METTLER TOLEDO dealer or service representative.

Always operate and use your balance only in accordance with the operating instructions part 1, part 2, part 3 and WeighCom application for XP comparator balances.

The instructions for setting up your new balance must be strictly observed.

If the instrument is not used according to the manufacturer's operating instructions (part 1, part 2, part 3 and WeighCom application for XP comparator balances), protection of the instrument may be impaired.

Staff safety

In order to use the instrument, you must have read and understood the operating instructions. Keep the operating instructions for further reference.

Never make any modifications to the instrument and use only original spare parts and optional equipment from METTLER TOLEDO.

Safety notes

WARNING

Risk of electric shock

Use only the original universal AC adapter delivered with your balance, and check that the voltage printed on it is the same as your local power supply voltage. Only plug the adapter into a socket which is grounded.

WARNING

Heavy object

– Single person lift could cause injury.

– Do not move or lift this equipment without assistance.

– For moving this equipment ask your METTLER TOLEDO representative.

CAUTION

Damage of device

– For use only in dry interior rooms.

– Do not use sharply pointed objects to operate the keyboard! Although your balance is very ruggedly constructed, it is nevertheless a precision instrument. Treat it with corresponding care.

– Do not open the balance: It does not contain any parts which can be maintained, repaired, or replaced by the user. If you ever have problems with your balance, contact your METTLER TOLEDO dealer.

– Use only balance accessories and peripheral devices from METTLER TOLEDO; they are optimally adapted to your balance.

3 Overview XP-L Comparators

3.1 Overview XP32003L/XP64002L

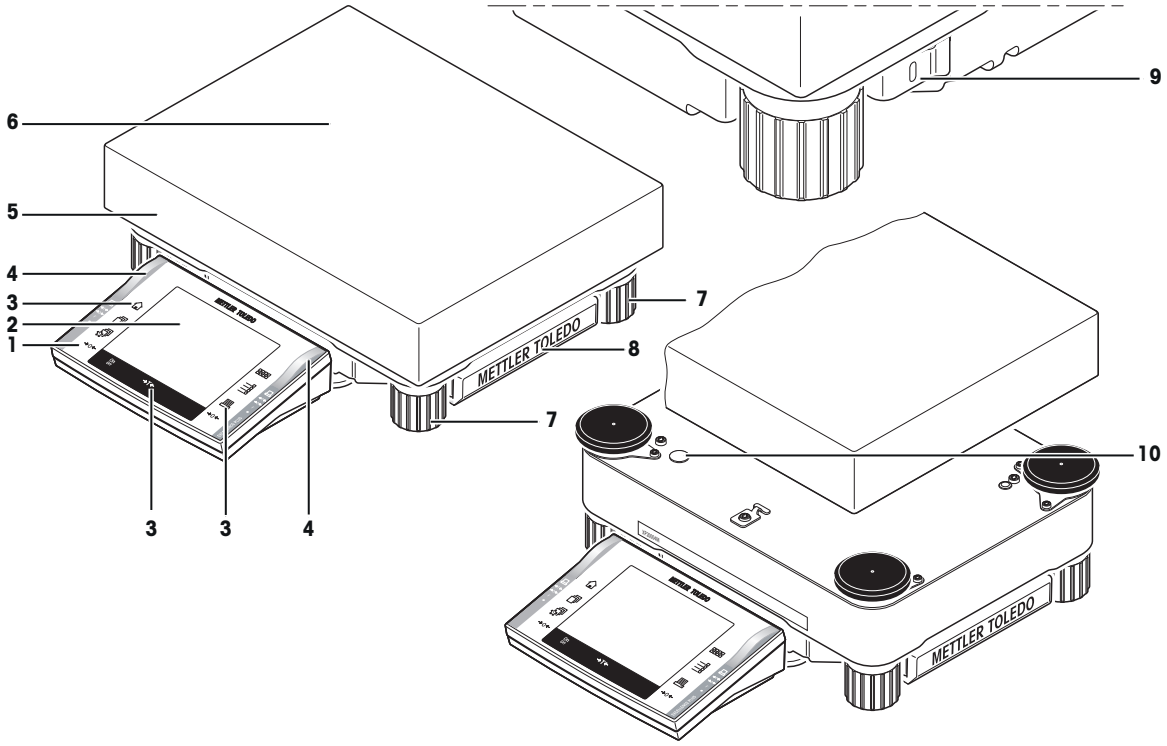

Top View XP32003L/XP64002L

1	Terminal (details **see** Operating Instruction – Part 2)	**2**	Display (Touch-sensitive "Touch screen")
3	Operating keys	**4**	SmartSens sensors
5	Type name	**6**	Weighing pan
7	Foot screws	**8**	Cover
9	Fastening point for anti-theft device	**10**	Level indicator / level sensor

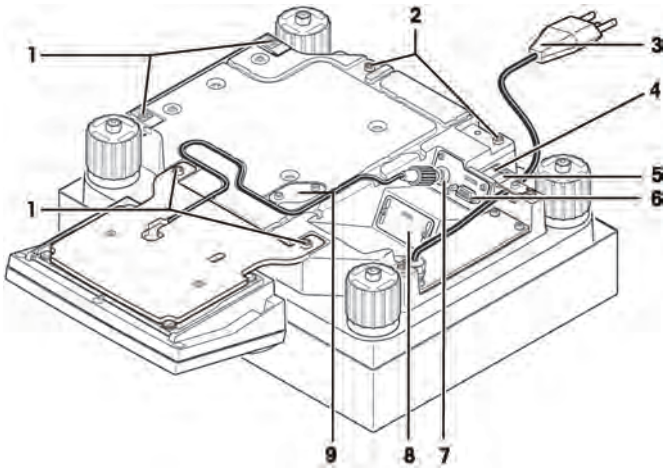

Bottom View XP32003L/XP64002L

1	Points of attachment for terminal or cover	**2**	Fastening for terminal stand (optional)
3	Power cable	**4**	Aux 1 (connection for "ErgoSens", hand- or foot-switch)
5	Aux 2 (connection for "ErgoSens", hand- or foot-switch)	**6**	RS232C serial interface
7	Connector for terminal cable	**8**	Slot for second interface (optional)
9	Cover plate for below-the-balance weighing (hook optional)		

3.2 Overview XP26003L/XP64003L with Levelmatic

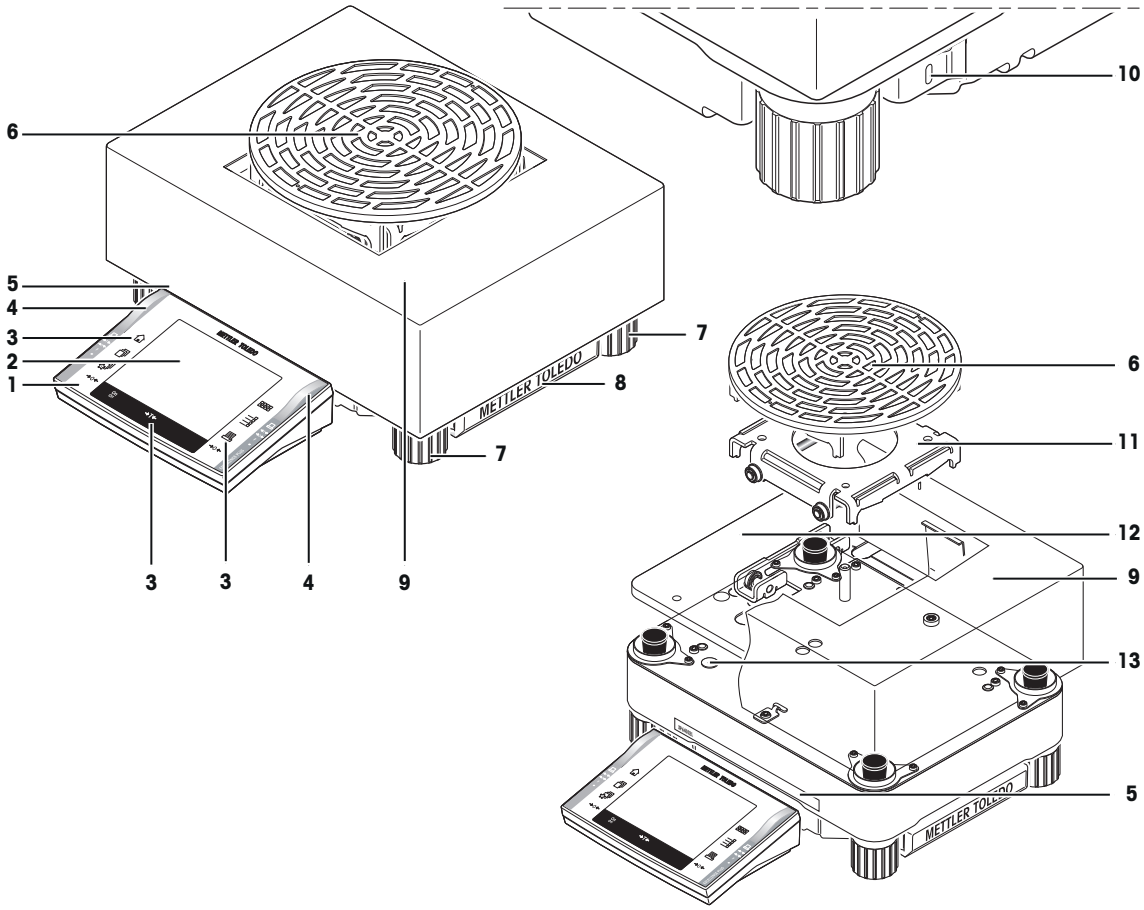

Top View XP26003L/XP64003L

1	Terminal (details **see** Operating Instruction – Part 2)	**2**	Display (Touch-sensitive "Touch screen")
3	Operating keys	**4**	SmartSens sensors
5	Type name	**6**	Levelmatic weighing pan
7	Foot screws	**8**	Cover
9	Draft shield element	**10**	Fastening point for anti-theft device
11	Levelmatic secondary base	**12**	Adapter plate with Levelmatic base plate.
13	Level indicator / level sensor		

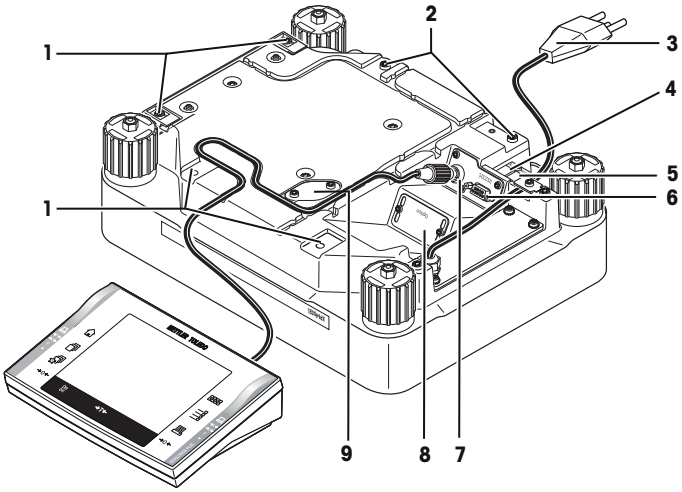

Bottom View XP26003L/XP64003L

1	Points of attachment for terminal or cover	**2**	Fastening for terminal stand (optional)
3	Power cable	**4**	Aux 1 (connection for "ErgoSens", hand- or foot-switch)
5	Aux 2 (connection for "ErgoSens", hand- or foot-switch)	**6**	RS232C serial interface
7	Connector for terminal cable	**8**	Slot for second interface (optional)
9	Cover plate for below-the-balance weighing (hook optional)		

4 Installation and Putting into Operation

WARNING

Risk of electric shock

The balance must be disconnected from the power supply before any set-up or installation work, as well as when the housing of the weighing terminal is opened.

4.1 Unpacking and checking the standard equipment

Open the packaging and carefully remove all components.

4.2 Scope of delivery

- Weighing platform
  - RS232C interface
  - Slot for second interface (optional)
  - Feedthrough for antitheft device
- Weighing pan 280 × 360 mm (XP32003L and XP64002L)
- Levelmatic ø 220 mm and draft shield cover (XP26003L and XP64003L)
- Weighing pan round ø 220 mm and draft shield cover (XP64002L-T)
- Terminal (XP32003L and XP64002L with terminal support) and protective cover
- Draft shield XP W64 (XP26003L and XP64003L)
- Transport case (XP64002L-T)
- Country-specific power cable
- Shipping lock (2 pieces)
- Production certificate
- CE declaration of conformity
- Operating instructions part 1 (this document), part 2, part 3 and WeighCom application for XP comparator balances

4.3 Location

An optimal location will ensure accurate and reliable operation of the balance. The surface must be able to safely take the weight of the balance when fully loaded. The following local conditions must be observed:

Note
If the balance is not horizontal at the outset, it must be leveled during commissioning.

- The balance must only be used indoors and up to a maximum altitude of 4000 m above sea level.
- Before switching on the balance, wait until all parts are at room temperature (+10 to 30 °C).
  The humidity must be between 10% and 80% non-condensing.
- The power plug must be accessible at all times.
- Firm, horizontal and vibration-free location.
- Avoid direct sunlight.
- No excessive temperature fluctuations.
- No strong drafts.

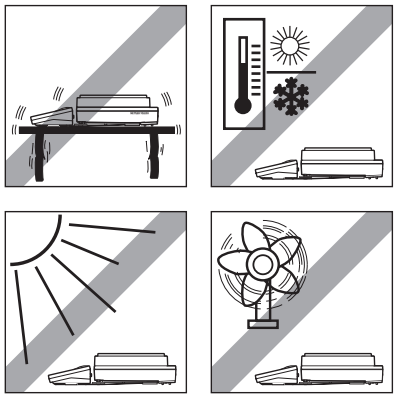

Further information can by found in Weighing the Right Way.

4.4 Assembling the balance

4.4.1 Placing the terminal on the weighing platform

The terminal can be attached to the long or short side of the balance.

▶ Ensure that the transport arrestment is installed, Before attaching the terminal.
See Removing/inserting the transport arrestments (page 15).

– Carefully turn the weighing platform over and position it on a smooth surface to protect the weighing pan support points.

Attaching the terminal to the long side

1 Dismantle the cover (1) by removing the 2 screws (2).
2 Attach the terminal to the terminal support (5) as shown, using the screws (2) from the cover that was removed.
3 Insert the terminal cable (3) into the cable channel, as shown.
4 Screw the connector of the terminal cable into the socket (4).
5 Turn the balance back over into position.

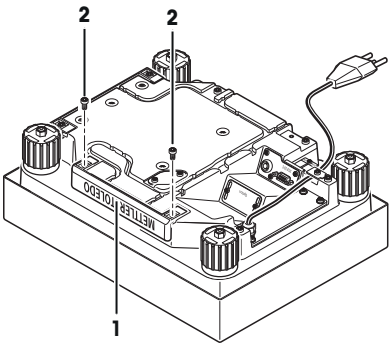

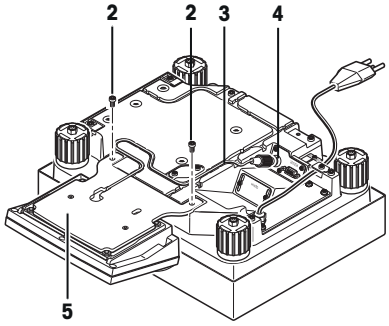

Attaching the terminal to the short side

1 Dismantle the cover (1) by removing the 2 screws (2).

2 Attach the terminal with terminal support to the points of attachment (6) with the screws (2).

3 Insert the terminal cable (3) into the cable channel, as shown.

4 Screw the connector of the terminal cable into the socket (4).

5 Turn the balance back over into position.

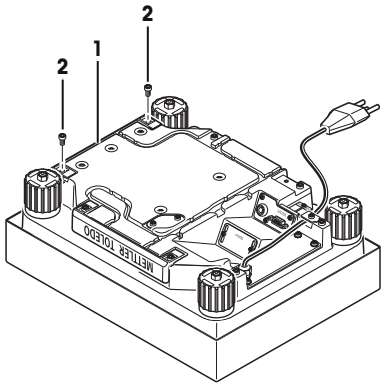

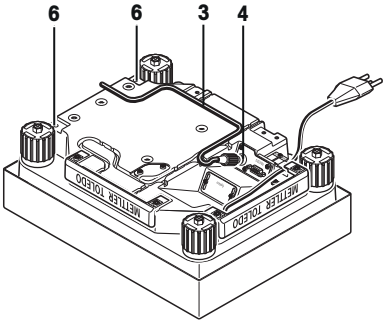

4.4.2 Removing/inserting the transport arrestments

1 Screw both transport arrestments out of the cell in counterclockwise direction.

2 Cover the openings with the enclosed plastic covers.

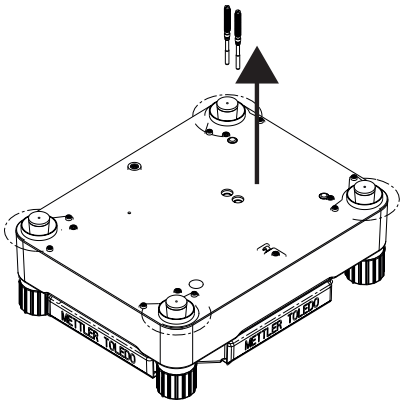

1 Reinsert both transport arrestments for all transports.

2 Tighten the transport arrestments only loosely.

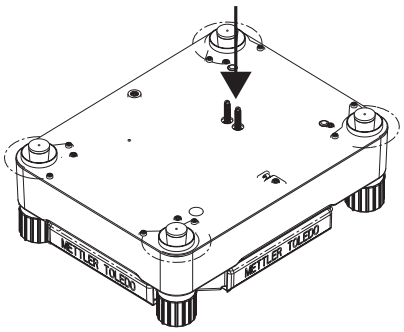

4.4.3 Freestanding terminal installation

▶ Ensure that a soft, clean surface is used so as not to damage the terminal surface.

1 Place the terminal on the operating surface.

2 Open the housing by pressing the 2 buttons (1) for adjusting the terminal and swiveling the housing base upwards.

3 Pull the cable with the retaining ring (2) through the opening on the housing base.

4 Return the terminal to its normal position.

5 Open it so that the cable can be accessed.

6 Insert the cable (3) into the top housing.

7 Close both parts of the housing until the retaining ring (2) is positioned in the cable opening of the housing base.

8 Place the retaining ring (2) behind the two guideways and check that it is secure (tension relief).

9 Before closing the housing, check that the plug is inserted correctly into the terminal plug-in connection.

10 Now close the housing by pressing the two buttons (1) for adjusting the terminal until the housing base engages in the top housing.

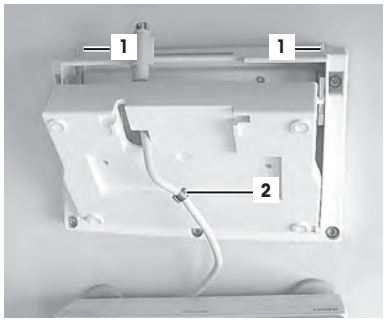

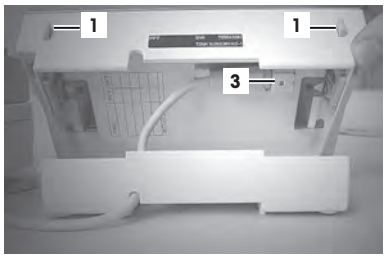

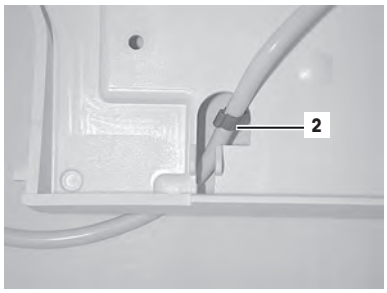

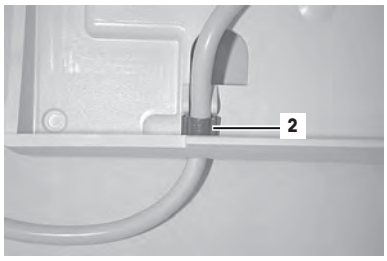

4.4.4 Installation of the standard weighing pan

– Mount the weighing pan.

4.4.5 Installing the Levelmatic

1 Place the attached adapter plate (2) on the housing base (1).
2 Put on the draft shield cover (3).
3 Place the secondary base (4) on the base plate.
4 Place the Levelmatic weighing pan (5) on top.

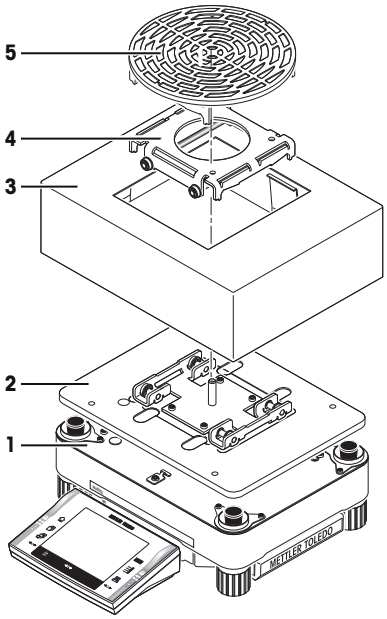

4.5 Connecting the balance

WARNING

Risk of electric shock

a) To connect the balance, only use the supplied three-core power cord with equipment grounding conductor.

b) Only connect the balance to a three-pin power socket with earthing contact.

c) Only standardized extension cable with equipment grounding conductor must be used for operation of the balance.

d) Intentional disconnection of the equipment grounding conductor is forbidden.

The balance is supplied with a country-specific power cable.

100 – 240 V AC, 50/60 Hz.

Attention

- Check whether your local power supply falls within this range. If this is not the case, under no circumstances connect the AC adapter to the power supply, but contact a METTLER TOLEDO representative.
- The power plug must be accessible at all times.
- Prior to use, check the power cord for damage.
- Route the cable in such a way that it cannot be damaged or cause a hindrance when working.
- Ensure that no liquid comes into contact with the AC adapter.

Note
If the display field remains dark, even though the power supply connection functions.

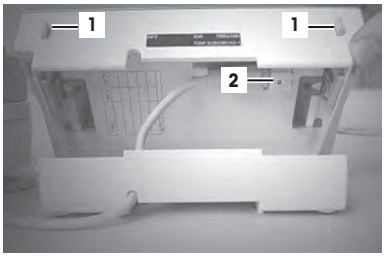

1 First disconnect the balance from the power supply.
2 Open the terminal.
3 Press both buttons (1) on the back of the terminal and open the upper part of the terminal.
4 Check that the plug for the terminal cable (2) is connected correctly inside the terminal.

4.6 Setting up the terminal separately (XP32003L and XP64002L)

The terminal is connected to the weighing platform with a cable. The terminal can be removed from the weighing platform and located separately to ensure the optimum setup of your workplace.

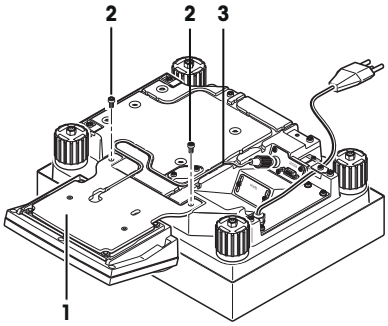

1 Switch off the balance.
2 Carefully turn the weighing platform over onto the weighing pan.
3 Carefully pull the terminal cable (3) out of the cable channel.
4 Remove the screws (2).
5 Lift the terminal with terminal support (1) off the weighing platform.
6 Open the housing by pressing the 2 buttons (4) for adjusting the terminal.
7 Unplug the cable (5) and pull it out of the housing through the opening.
8 Remove the 2 knurled screws (6) and detach the terminal support.
9 Pull the cable back through the base of the housing and plug it in.
10 Close the terminal and place it in the desired position.
11 If possible, insert the terminal cable (3) back into the cable channel.
12 Turn the balance back over into position.

The cable can also be led out the back or the side of the weighing platform.

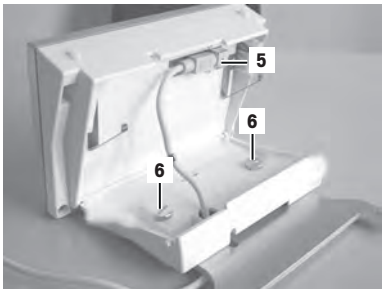

4.7 Setting the reading angle

1 Press in the two buttons (1) on the back of the terminal.
   ⇨ The top of the terminal can then be pulled up or pushed down until it engages in the desired position. A total of 3 setting positions are available.
2 Move it in an appropriate position.

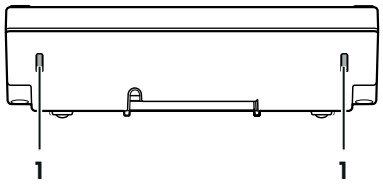

4.8 Transporting the balance

Observe the following instructions to transport your balance to a new location.

▶ Ensure that the transport arrestments are correctly installed.
See Removing/inserting the transport arrestments (page 15).

1 Switch off the balance.

2 The balance must be disconnected from the power supply.

3 Remove any interface cable from the balance.

4.8.1 Transporting over short distances

CAUTION

Damage of device

The terminal is not permanently connected to the weighing platform and therefore the balance must be carried horizontally.

– Remove the terminal from the terminal support and place the terminal on the weighing pan.

1 Hold the weighing platform with both hands and lift horizontally.

2 Carry the balance horizontally to the new location.

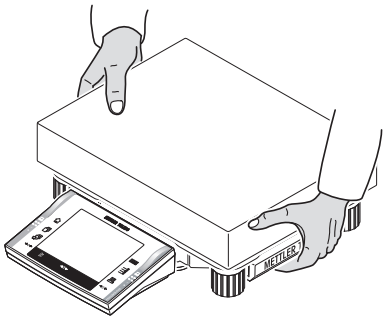

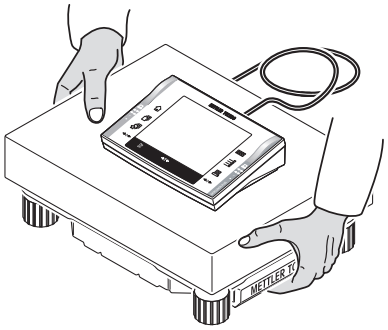

4.8.2 Transporting Over Long Distances

If you want to transport or ship your balance over long distances, or if it is not certain that the balance will be transported upright, use the complete original packaging.

4.9 Below-the-balance weighing

Your balance is equipped with a hanger for carrying out weighings below the work surface (weighing below the balance).

1 Switch off the balance.

2 The balance must be disconnected from the power supply.

3 Remove any interface cable from the balance.

Note
For below-the-balance weighing, you will need hook 11132565 from the accessories.

See Accessories (page 37).

Preparing for below-the-balance weighing

– Remove the Levelmatic in the order listed (depending on the model):
  - Levelmatic weighing pan (1)
  - Secondary base (2)
  - Draft shield cover (3)
  - Adapter plate with base plate (4)

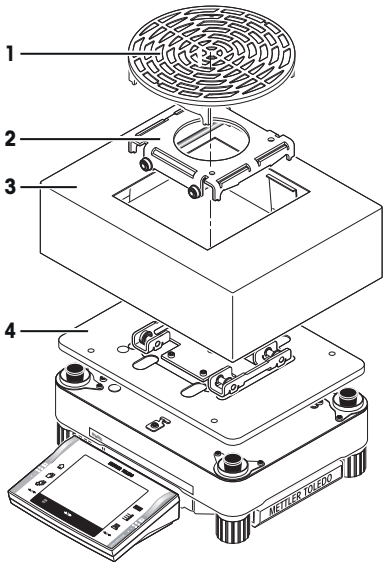

1 Tilt the weighing platform backwards until the cover plate (2) is visible.
2 Remove the 2 screws (1) and the cover plate (2).
  ⇨ The hanger is now accessible.
3 Fasten the hooks (optional) with screws.
4 Return the balance to its normal position and simply reinstall all components in the reverse order.

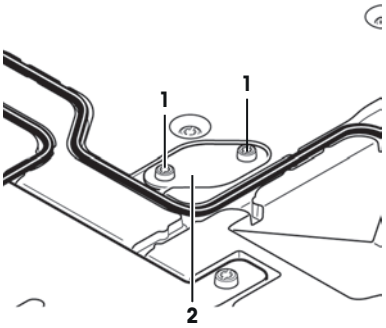

5 First Steps

5.1 Switching On / Off

Switching on

– Press «**On/Off**».

⇨ The display appears.

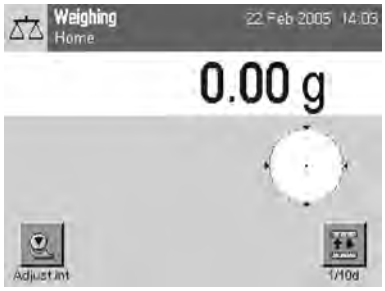

Note
If the balance has not been set up exactly horizontally, a warning text will appear shortly after the balance is turned on, prompting you to level the balance.

Switching off

– Press «**On/Off**» until "Off" appears in the display.

Note
Do not disconnect the balance from the power supply except if you will not be using the balance for an extended period.

5.2 Leveling the balance

Your balance has a built-in levelcontrol, that constantly checks the correct horizontal alignment.

When the levelcontrol detects that the level is incorrect, a warning will appear and a warning beep will sound. A status icon will also appear in the upper right-hand corner of the display.

1 Touch the button that matches your site and your configuration.

2 Remove the weighing pan so you can monitor the level indicator.

3 Tap «**Forward >**».

4 Turn the leveling foot all the way up, in the direction of the red arrow.

5 Tap «**Forward >**».

6 Watch the levelcontrol located of your balance and press the appropriate button of the current position.

7 The Leveling Assistant will now use red arrows to indicate the direction in which you must turn the footscrews.

8 Screw the footscrew until the air bubble is in the inner circle.

9 Tap «**Forward >**».

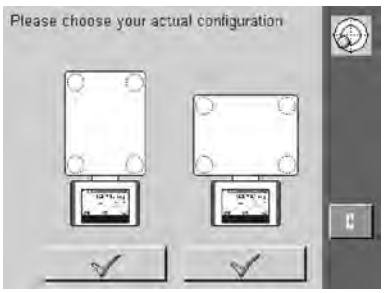

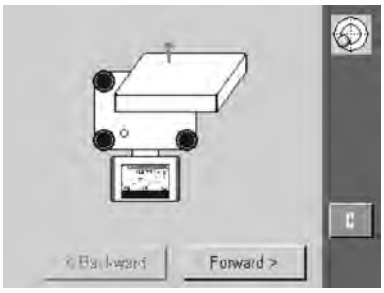

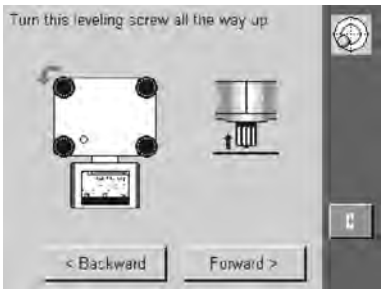

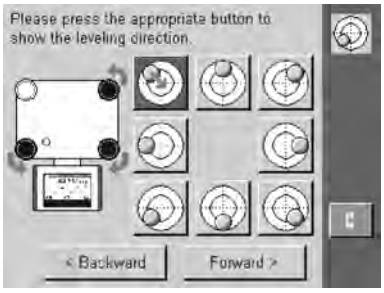

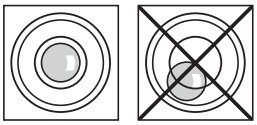

1 Unscrew the footscrew until it **lightly** touches the supporting surface.

2 Tap «**Forward >**».

3 Tap «**Exit**».

⇨ A message appears that advises you to adjust the balance.

4 Confirm with «**OK**».

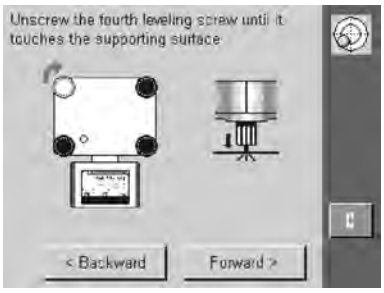

⇨ Status icon will no longer appear and balance returns to normal operation.

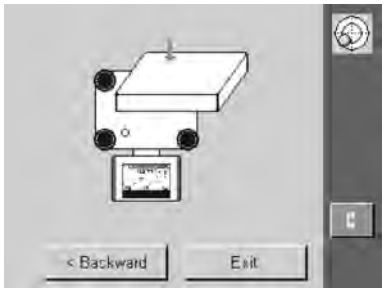

6 Special Settings for XP-L Comparators

To fully utilize the high resolution of the balance, some specific rules must be observed. These will enable you to obtain the best possible results.

6.1 Load the balance

Because of the high resolution of the balance, even minute differences of temperature or humidity can affect the result. Make sure that the weighing pan are clean and that the weighing sample is acclimatized.

CAUTION

Use gloves or working aids when loading and unloading the balance

Otherwise artifacts may be damaged.

6.2 Settings for the balances

In the tables below you will find the factory settings for the system settings and the user-specific settings of the XP-L comparator balances. Detailed information is found in the Opreating Instructions Part 2 and Part 3.

6.2.1 System settings

Navigation: «⚙» or «⠿» > «**System**» > «**Adjust/Test**»

Menu structure

Main menu	Submenu	Further information
Adjust/Test	**Test/Adj. Weight**	**see** External adjustment weights
	ProFACT / Int. Adj.	**see** Fully automatic adjustment function ProFACT
	Test History	**see** Adjustment history

You can define the following parameters:

Menu item	Explanation	Further Information
Test/Adj. Weight	Defines the test weights and parameters for adjusting and the workflow for testing or adjusting.	**see** External adjustment weights
ProFACT / Int. Adj.	Weight adjustment - internal.	**see** Fully automatic adjustment function ProFACT
Test History	Records test results.	**see** Adjustment history

External adjustment weights

Navigation: «⚙» > «**System**» > «**Adjust/Test**» > **Test/Adj. Weight**

Menu structure

Main menu	Submenu	Further information
Test/Adj. Weight 1 … **Test/Adj. Weight12**	**Name**	**see** Parameter table
	Weight ID	
	Class	
	Certificate No.	
	Weight Set No.	
	Actual Value	
	Next Recalibration	

You can define the following parameters:

Parameter	Explanation	Values
Name	Defines a name for a test weight. **Note** Alternative to the Weight ID and Certificate No. (E.g. 20g QK).	any (max. 20 characters!) (**Test/Adj. Weight**)*
Weight ID	Defines the identification (ID) of the weight. **Note** The ID of the weight is provided on the Weight Certificate. The ID may contain your company specific identification number.	any (max. 20 characters!) (**Define**)*
Class	Choose the predefined classes (model-dependent). **Note** Choose own when none of the other classes apply.	**E1*** | **E2** | **F1** | **F2** | **M1** | **M2** | **M3** | **ASTM1** | **ASTM2** | **ASTM3** | **ASTM4** | **ASTM5** | **ASTM6** | **ASTM7** | **Own**
Certificate No.	Define the certificate number of the external test weight.	any (max. 20 characters!) (**Define**)*
Weight Set No.	Define the identification number to the set of weights (if the test weight belongs to a set).	any (max. 20 characters!) (**Define**)*
Actual Value	Weight value from the weight certificate. Independent of the balance model, the complete number should be entered regardless of the number of decimal places (e.g. 20.00124 g). **Note** Methods always use the actual value and the maximum decimal places of the balance will be used for computation.	Weight value (**0 g**)*
Next Recalibration	Enter the date when the next calibration of the weight is due. **Note** If no calibration of the weight is planned, the present value (31.12.2099) will be retained.	**DD.MM.YYYY** (**31.12.2099**)*

* Factory setting

Fully automatic adjustment function ProFACT

Navigation: «⚙» > «**System**» > «**Adjust/Test**» > **ProFACT / Int. Adj.**

Menu structure

Main menu	Submenu	Further information
Off	no submenu	none
ProFACT / Int. Adj.	**Weekdays**	**see** Parameter table
	Temp.Criterion	
	Protocol Trigger	

Note

When comparing masses, it is not advisable to switch **ProFACT** on.

You can define the following parameters:

Parameter	Explanation	Values
Weekdays	Define the days on which fully automatic adjustment should be carried out.	**Monday*** | **Thursday*** | **Wednesday*** | **Thursday*** | **Friday*** | **Saturday*** | **Sunday***
Temp.Criterion	Define the change in ambient temperature which will trigger the automatic adjustment.	**Off** | **0.5 Kelvin** | **1 Kelvin*** | **2 Kelvin** | **3 Kelvin**

Protocol Trigger	Enables or disables automatic printing of a recording as soon as the automatic adjustment is triggered.	**On*** | **Off**

* Factory setting

Adjustment history

Navigation: «⚙» > «**System**» > «**Adjust/Test**» > **Test History**

Menu structure

Main menu	Submenu	Further information
Adj. History	no submenu	none
Adj. History Selection	**Selection**	**see** Parameter table
	Display Datasets	
GWP History	no submenu	none

You can define the following parameters:

Parameter	Explanation	Values
Selection	Select the adjustments you want to have displayed in the **Adj. History** above.	**Manual adjust.*** | **Temperature*** | **Time Adjust.***
Display Datasets	Display records.	**Last 10** | **Last 20** | **Last 30** | **Last 40** | **Last 50***

* Factory setting

6.2.2 User-specific settings

Navigation: «⚙» > «**Wghparam**»

Menu structure

Main menu	Submenu	Further information
Wghparam	**Weighing Mode**	**see** Weighing Mode
	AutoZero	**see** AutoZero
User	**Language**	**see** Language
Terminal	**Optical key feedback**	**see** Optical key feedback

Defining weighing parameters

You can define the following parameters:

Parameter	Explanation	Values
Weighing Mode	Settings for adapting the balance to particular weighing conditions. **Note** For the XP-L balances only the «**Universal**» and «**Sensor Mode**» settings are available.	**Universal*** | **Dosing** | **Sensor Mode** | **Check-weighing**
AutoZero	Enables or disables the function **AutoZero**. Is switched off at initial operation and after a factory reset (resetting to the factory settings), but can be switched on again when required. When changing over to the "WeighCom" application, **AutoZero** is automatically switched off. When changing back to the "Weigh" application, the previous status of **AutoZero** is restored. **Attention** When comparing masses, **AutoZero** must not be switched on, because it can distort the measurement values.	**Off*** | **On**

* Factory setting

Entering user data

Navigation: «⚙» > «**User**»

You can define the following parameters:

Parameter	Explanation	Values
Language	Defines your preferred display and keyboard language.	**English*** | **Deutsch** | **Français** | **Español** | **Italiano** | **Russian** | **Katakana** | **Polski** | **Cestina** | **Magyar** | **Chinese** | **Japanese**

* Factory setting

Terminal settings

Navigation: «⚙» > «**Terminal**»

You can define the following parameters:

Parameter	Explanation	Values
Optical key feedback	Enables or disables the function **Optical key feedback**.	**Off*** | **On**

* Factory setting

7 The WeighCom Application

Practical information about working with the «**WeighCom**» application along with the possible settings find in the separate operating instructions "WeighCom Application for XP Comparator Balances".

7.1 Introduction to the WeighCom application

So that weights can be traced back to the prototype kilogram, the mass of the weight being determined must be compared with the mass of the reference weight. This procedure requires great care by the operator so that no weights are confused. On the comparator balances, the «**WeighCom**» application guides the user through this mass-comparison weighing with weights of any manufacturer and thereby ensures the certainty and reliability of the mass-comparison weighing.

7.2 Selecting the application

Navigation: «⁞⁞⁞⁞» > «**WeighCom**»

▶ «**WeighCom**» application is not selected.

1 Press the «⁞⁞⁞⁞» key.

2 Tap the «**WeighCom**» icon in the selection window.

⇨ The comparator balance is then ready for the mass-comparison weighing.

8 Maintenance

8.1 Cleaning

Periodically clean the weighing pan, Levelmatic (depending on the model), draft shield (depending on the model), housing and terminal of your balance using a damp cloth. The maintenance interval depends on your standard operating procedure (SOP).

Please observe the following notes

WARNING

Risk of electric shock

a) Disconnect the balance from the power supply prior to cleaning and maintenance.

b) Only use METTLER TOLEDO power cable, if these need to be replaced.

c) Ensure that no liquid comes into contact with the balance, terminal or AC adapter.

d) Do not open the balance, terminal or AC adapter.
These contain no user-serviceable parts.

CAUTION

Damage of balance

On no account use cleaning agents which contain solvents or abrasive ingredients, as this can result in damage to the terminal overlay.

Cleaning

Your balance is made from high quality, resistant materials and can therefore be cleaned with a commercially available, mild cleaning agent.

Note
Please contact your METTLER TOLEDO dealer for details of the available service options. Regular servicing by an authorized service engineer ensures constant accuracy for years to come and prolongs the service life of your balance.

8.2 Disposal

In conformance with the European Directive 2002/96/EC on Waste Electrical and Electronic Equipment (WEEE) this device may not be disposed of in domestic waste. This also applies to countries outside the EU, per their specific requirements.

Please dispose of this product in accordance with local regulations at the collecting point specified for electrical and electronic equipment. If you have any questions, please contact the responsible authority or the distributor from which you purchased this device. Should this device be passed on to other parties (for private or professional use), the content of this regulation must also be related.

Thank you for your contribution to environmental protection.

9 Technical Data

9.1 General data

Power supply

Power supply:	115-240 VAC, -15%/+10%, 50/60 Hz, 0.4 A
Power cable:	3-core, with country-specific plug

Protection and standards

Overvoltage category:	II
Degree of pollution:	2
Protection:	IP44, protected against dust and water
Standards for safety and EMC:	See Declaration of Conformity
Range of application:	For use only in closed interior rooms

Environmental conditions

Height above mean sea level:	Up to 4000 m
Ambient temperature:	18…27 °C ±0.3 °C / 1 h or 0.5 °C / 12 h respectively
Relative air humidity:	40 up to 60% ±5% / 4 h
Maximum air speed:	0.15 m/sec
Maximum loading speed:	5 mm/sec

Materials

Housing:	Sheet aluminum, die cast, laquered, plastic and chrome steel
Terminal:	Die-cast zinc, chromed and plastic
Weighing pan:	Chrome-nickel steel X5CrNi18-10
Draft shield:	Plastic, chrome-nickel steel, aluminium and glas
Levelmatic:	Chrome-nickel steel and aluminium

9.2 Model-specif data

		XP26003L	XP32003L	XP64003L
Limit values				
Maximum capacity		26.1 kg	32.1 kg	64.1 kg
Readability		0.001 g	0.005 g	0.005 g
Tare range (from…to)		0 … 26.1 kg	0 … 32.1 kg	0 … 64.1 kg
Repeatability (at nominal load)	sd	0.005 g (20 kg)	0.015 g (20 kg)	0.013 g (50 kg)
Repeatability (at low load)	sd	0.004 g (1 kg)	0.015 g (1 kg)	0.013 g (2 kg)
Repeatability (at nominal load) (ABA, measured at) 2)	sd	0.003 g (20 kg)	0.01 g (20 kg)	0.008 g (50 kg)
Repeatability (at low load) (ABA, measured at) 2)	sd	0.002 g (1 kg)	0.005 g (1 kg)	0.004 g (2 kg)
Linearity deviation		0.025 g	0.04 g	0.05 g
Eccentricity deviation (test load)		–	0.25 g (10 kg)	–
Sensitivity offset (test weight)		0.25 g (20 kg)	0.3 g (20 kg)	0.9 g (50 kg)
Sensitivity temperature drift 1)		0.0003%/°C	0.0003%/°C	0.0005%/°C
Sensitivity stability		0.0015%/a	0.002%/a	0.003%/a
Typical values				
Repeatability (at low load) 2)	sd	0.003 g (20 kg)	0.012 g (20 kg)	0.011 g (50 kg)
Repeatability ABA 2)	sd	0.0025 g (20 kg)	0.009 g (20 kg)	0.007 g (50 kg)
Linearity deviation		0.0114 g	0.028 g	0.028 g
Eccentric deviation (test load)		–	0.16 g (10 kg)	–
Sensitivity offset (test weight)		0.02 g (20 kg)	0.04 g (20 kg)	0.08 g (50 kg)
Minimum weight (according to USP)		0.0045 kg	0.024 kg	0.021 kg

		XP26003L	XP32003L	XP64003L
Minimum weight (U=1%, k=2)		0.0003 kg	0.0016 kg	0.0014 kg
Settling time		8 … 12 s	8 … 12 s	8 … 12 s
Dimensions				
Balance dimensions (W × D × H)		360 × 280 × 185 mm	360 × 280 × 185 mm	360 × 280 × 185 mm
Weighing pan dimensions		∅ 220 (Levelmatic) mm	360 × 280 mm (W × D)	∅ 220 (Levelmatic) mm
Typical uncertainties and supplementary data				
Repeatability [2]	sd	0.0015 g + 0.000006%·Rgr	0.008 g + 0.000013%·Rgr	0.007 g + 0.0000064%·Rgr
Repeatability (ABA, measured at) [2]	sd	0.0015 g + 0.0000053%·Rgr	0.004 g + 0.000026%·Rgr	0.0035 g + 0.0000073%·Rgr
Differential linearity deviation	sd	√0.005 mg·Rnt	√0.024 mg·Rnt	√0.012 mg·Rnt
Differential eccentric load deviation	sd	–	0.0016%·Rnt	–
Sensitivity offset	sd	0.0001%·Rnt	0.0002%·Rnt	0.00016%·Rnt
Minimum weight (according to USP)		0.0045 kg + 0.018%·Rgr	0.024 kg + 0.039%·Rgr	0.021 kg + 0.0192%·Rgr
Minimum weight (U=1%, k=2)		0.0003 kg + 0.0012%·Rgr	0.0016 kg + 0.0026%·Rgr	0.0014 kg + 0.00128%·Rgr
Weighing time 1 ABA [3]		69 … 81 s	69 … 81 s	69 … 81 s
Interface update rate		23 /s	23 /s	23 /s
Usable height of draft shield		350 mm	350 mm	350 mm
Weight of balance		15.7 kg	14.1 kg	15.7 kg
Number of built-in reference weights		2	2	2
Weights for routine testing				
OIML CarePac Weights		1 kg M1 #11117721 20 kg M1 #30024249	1 kg M1 #11117721 20 kg M1 #30024249	2 kg M1 #11117722 50 kg M1 #11125499
ASTM CarePac Weights		1 kg ASTM 2 #11123533 20 kg ASTM 2 #11123537	1 kg ASTM 2 #11123533 20 kg ASTM 2 #11123537	2 kg ASTM 2 #11123534 50 kg ASTM 2 #00158741

sd = Standard deviation
Rgr = Gross weight
Rnt = Net weight (sample weight)
a = Year (annum)

[1] In the temperature range 10…30 °C

[2] Value out of 5 ABA measurements according to OIML R111

[3] Unloading/Loading: 0–10 kg = 6 s, 20–50 kg = 15 s, 100–5000 kg = 35 s

		XP64002L	XP64002L-T
Limit values			
Maximum capacity		64.1 kg	64.1 kg
Readability		0.01 g	0.01 g
Tare range (from…to)		0 … 64.1 kg	0 … 64.1 kg
Repeatability (at nominal load)	sd	0.04 g (50 kg)	0.04 g (50 kg)
Repeatability (at low load)	sd	0.04 g (2 kg)	0.04 g (2 kg)
Repeatability (at nominal load) (ABA, measured at) [2]	sd	0.025 g (50 kg)	0.03 g (50 kg)
Repeatability (at low load) (ABA, measured at) [2]	sd	0.01 g (2 kg)	0.015 g (2 kg)
Linearity deviation		0.05 g	0.05 g
Eccentricity deviation (test load)		0.4 g (20 kg)	0.4 g (20 kg)
Sensitivity offset (test weight)		0.9 g (50 kg)	0.9 g (50 kg)
Sensitivity temperature drift [1]		0.0002%/°C	0.0005%/°C
Sensitivity stability		0.0012%/a	0.003%/a
Typical values			
Repeatability (at low load) [2]	sd	0.035 g (50 kg)	0.035 g (50 kg)
Repeatability ABA [2]	sd	0.02 g (50 kg)	0.023 g (50 kg)

		XP64002L	XP64002L-T
Linearity deviation		0.028 g	0.028 g
Eccentric deviation (test load)		0.24 g (20 kg)	0.24 g (20 kg)
Sensitivity offset (test weight)		0.08 g (50 kg)	0.08 g (50 kg)
Minimum weight (according to USP)		0.054 kg	0.054 kg
Minimum weight (U=1%, k=2)		0.0036 kg	0.0036 kg
Settling time		8 … 12 s	8 … 12 s
Dimensions			
Balance dimensions (W × D × H)		360 × 280 × 130 mm	360 × 280 × 130 mm
Weighing pan dimensions		360 × 280 mm (W × D)	∅ 220 mm
Typical uncertainties and supplementary data			
Repeatability [2]	sd	0.018 g + 0.000027%·Rgr	0.018 g + 0.000027%·Rgr
Repeatability (ABA, measured at) [2]	sd	0.007 g + 0.000027%·Rgr	0.012 g + 0.000023%·Rgr
Differential linearity deviation	sd	√0.012 mg·Rnt	√0.012 mg·Rnt
Differential eccentric load deviation	sd	0.0012%·Rnt	0.0012%·Rnt
Sensitivity offset	sd	0.00016%·Rnt	0.00016%·Rnt
Minimum weight (according to USP)		0.054 kg + 0.081%·Rgr	0.054 kg + 0.081%·Rgr
Minimum weight (U=1%, k=2)		0.0036 kg + 0.0054%·Rgr	0.0036 kg + 0.0054%·Rgr
Weighing time 1 ABA [3]		69 … 81 s	69 … 81 s
Interface update rate		23 /s	23 /s
Usable height of draft shield			
Weight of balance		10.7 kg	25 kg
Number of built-in reference weights		2	2
Weights for routine testing			
OIML CarePac Weights		2 kg M1 #11117722 50 kg M1 #11125499	2 kg M1 #11117722 50 kg M1 #11125499
ASTM CarePac Weights		2 kg ASTM 2 #11123534 50 kg ASTM 2 #00158741	2 kg ASTM 2 #11123534 50 kg ASTM 2 #00158741

sd = Standard deviation
Rgr = Gross weight
Rnt = Net weight (sample weight)
a = Year (annum)

[1] In the temperature range 10…30 °C

[2] Value out of 5 ABA measurements according to OIML R111

[3] Unloading/Loading: 0–10 kg = 6 s, 20–50 kg = 15 s, 100–5000 kg = 35 s

9.3 Dimensions

9.3.1 Dimensions XP32003L and XP64002L

Dimensions in mm

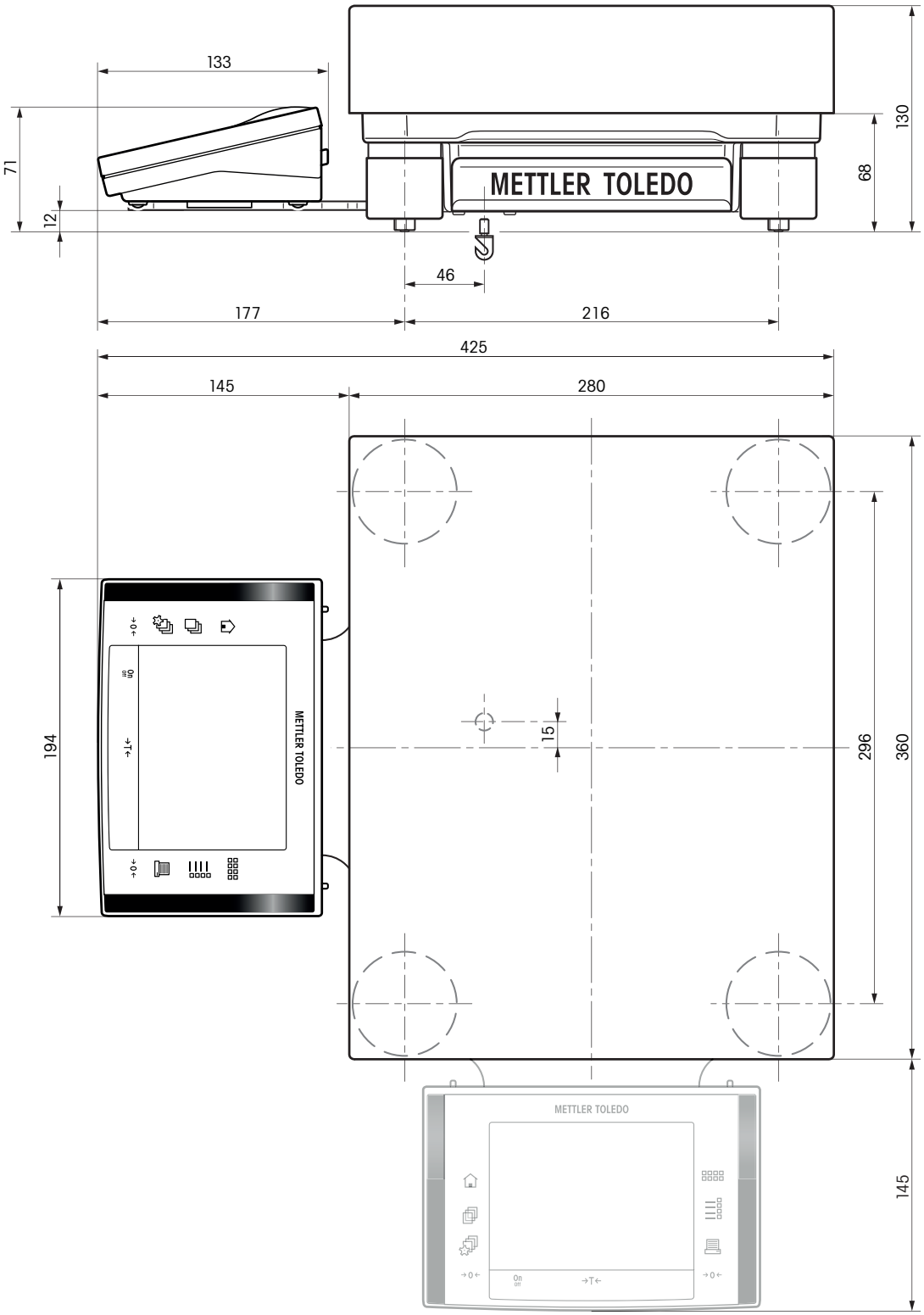

XP32003L and XP64002L

9.3.2 Dimensions XP26003L and XP64003L

Dimensions in mm

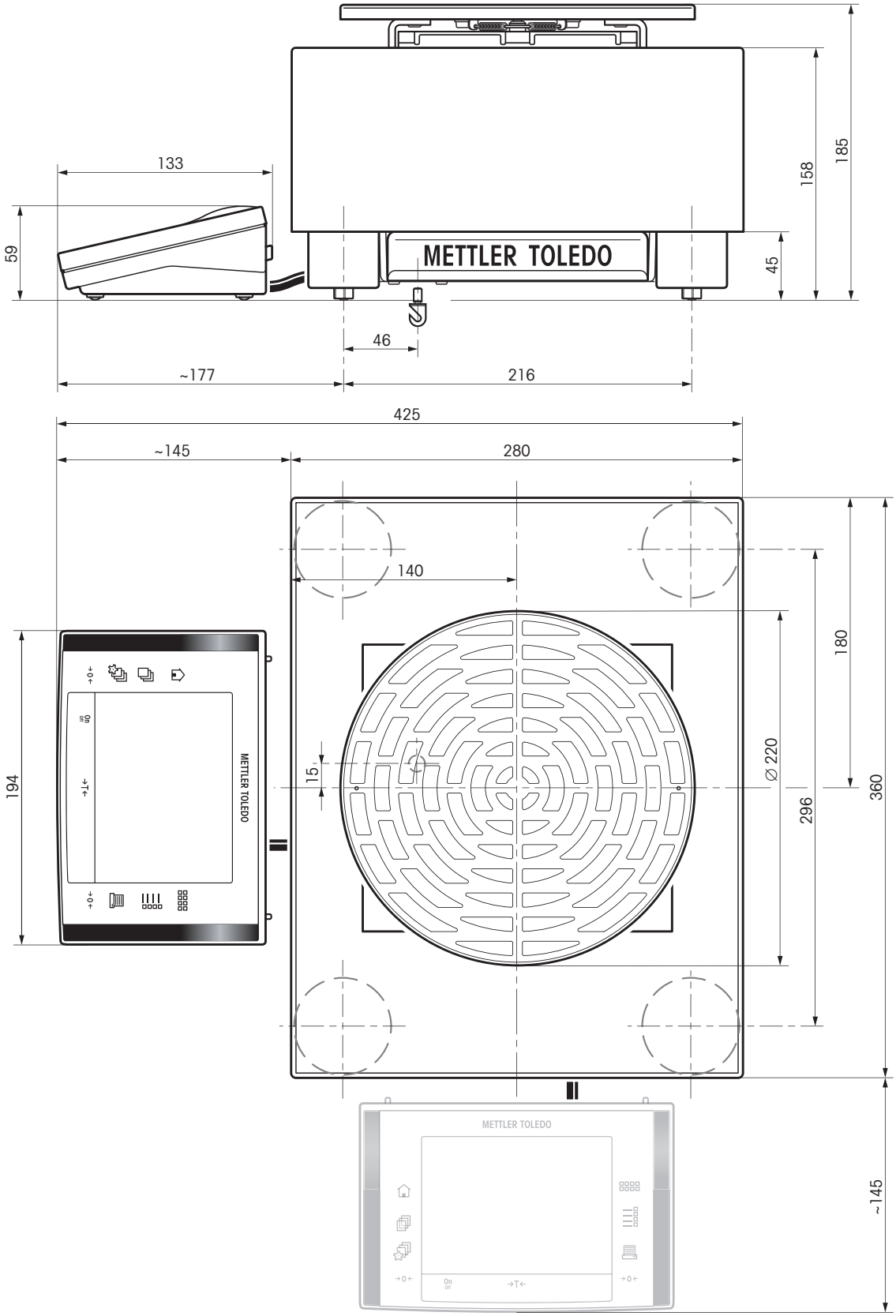

XP26003L and XP64003L

9.3.3 Dimensions draft shield XP-W64

Dimensions in mm

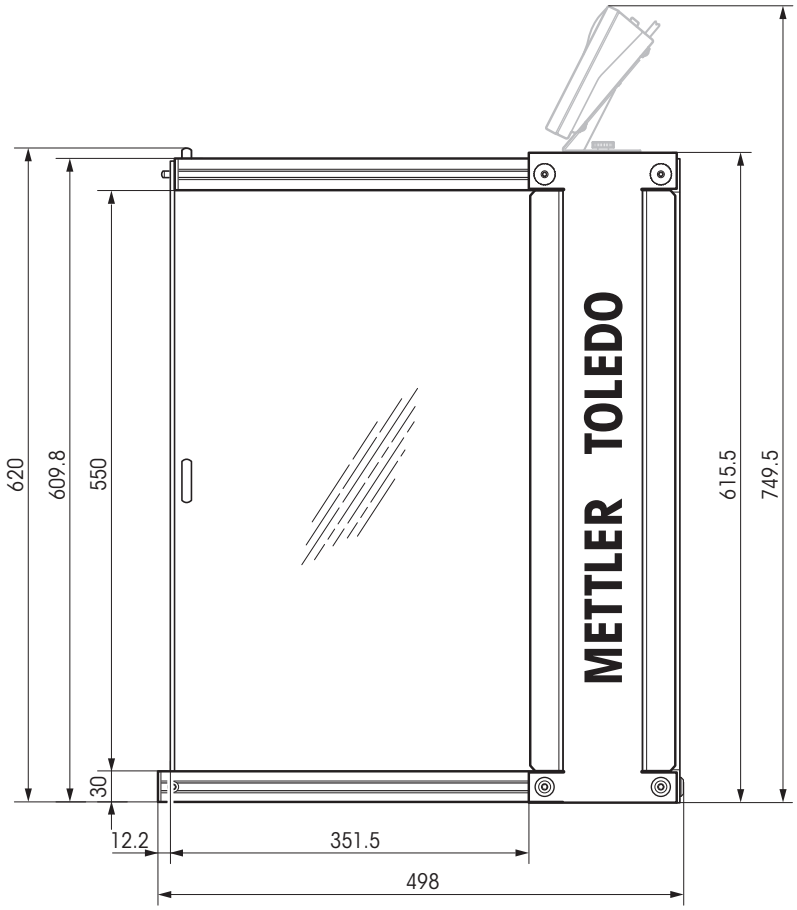

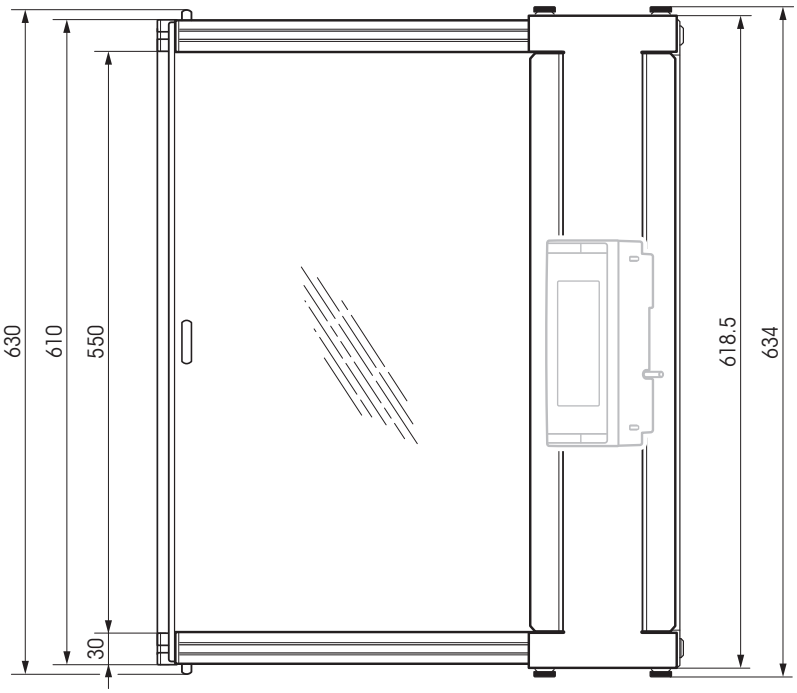

Draft shield XP-W64

9.4 Interfaces

9.4.1 Specifications of RS232C

Interface type:	Voltage interface according to EIA RS-232C/DIN 66020 (CCITT V24/V.28)	
Max. cable length:	15 m	
Signal level:	Outputs: +5 V … +15 V (RL = 3 – 7 kΩ) –5 V … –15 V (RL = 3 – 7 kΩ)	Inputs: +3 V … 25 V –3 V … 25 V
Connector:	Sub-D, 9-pole, female	
Operating mode:	Full duplex	
Transmission mode:	Bit-serial, asynchronous	
Transmission code:	ASCII	
Baud rates:	600, 1200, 2400, 4800, 9600, 19200, 38400[1)] (firmware selectable)	
Bits/parity:	7-bit/even, 7-bit/odd, 7-bit/none, 8-bit/none (firmware selectable)	
Stop bits:	1 stop bit	
Handshake:	None, XON/XOFF, RTS/CTS (firmware selectable)	
End-of-line:	<CR><LF>, <CR>, <LF> (firmware selectable)	
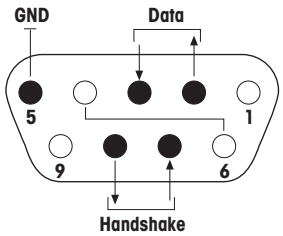	Pin 2: Balance transmit line (TxD) Pin 3: Balance receive line (RxD) Pin 5: Ground signal (GND) Pin 7: Clear to send (hardware handshake) (CTS) Pin 8: Request to send (hardware handshake) (RTS)	

1) 38400 baud is only possible in special cases, such as:
- Weighing platform without terminal, or
- Weighing platform with terminal, only via the optional RS232C interface.

9.4.2 Specifications of "Aux" connection

You can connect the METTLER TOLEDO "ErgoSens" or an external switch to sockets "Aux 1" and "Aux 2". This allows you to start functions such as taring, zeroing, printing and others.

External connection

Connector:	3.5 mm stereo jack connector	
Electrical data:	Max. voltage	12 V
	Max. current	150 mA

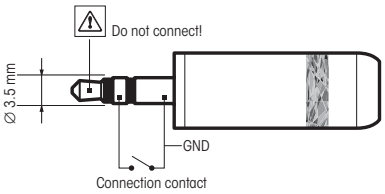

10 Accessories and Spare Parts

10.1 Accessories

You can increase the functionality of your balance with accessories from the METTLER TOLEDO range. The following options are available:

	Description	Part No.
Printers		
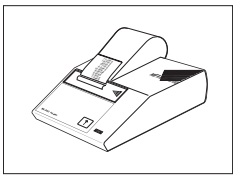	BT-P42 printer with Bluetooth connection to instrument	11132540
	Paper roll, set of 5 pcs	00072456
	Paper roll, self-adhesive, set of 3 pcs	11600388
	Ribbon cartridge, black, set of 2 pcs	00065975
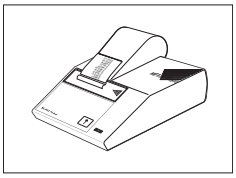	RS-P42 printer with RS232C connection to instrument	00229265
	Paper roll, set of 5 pcs	00072456
	Paper roll, self-adhesive, set of 3 pcs	11600388
	Ribbon cartridge, black, set of 2 pcs	00065975
Optional interfaces		
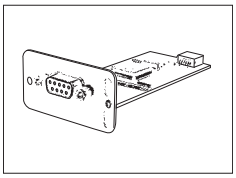	Second RS232C Interface	11132500
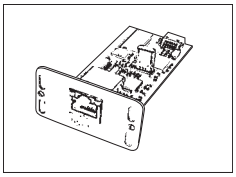	Ethernet Interface for connection to an Ethernet network	11132515
	BT option: Bluetooth Interface for multipoint connection for up to 6 Bluetooth devices	11132530
	BTS option: Bluetooth Interface, single-point connection	11132535

PS/2 option: Interface for connecting commercial keyboards and barcode readers — 11132520

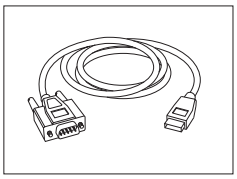

RS232 - USB converter cable – Cable with converter to connect a balance (RS232) to a USB port — 64088427

Cables for RS232C interface

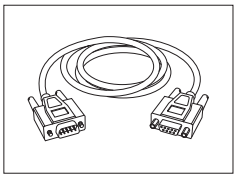

RS9 – RS9 (m/f): connection cable for PC, length = 1 m — 11101051

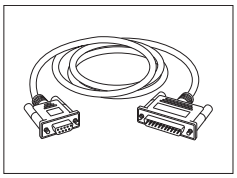

RS9 – RS25 (m/f): connection cable for PC, length = 2 m — 11101052

Cables for terminal

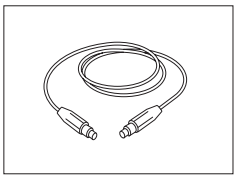

Terminal extension cable, length = 4.5 m — 11600517

Auxiliary displays

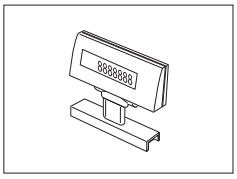

BT-BLD Bluetooth auxiliary display for table mounting, 168 mm, LCD display with backlighting — 11132555

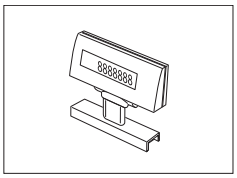

LC/RS-BLD auxiliary display on bench stand, backlit (incl. RS cable and separate AC adapter) — 00224200

RS/LC-BLDS auxiliary display for table or balance mounting, 480 mm, LCD display with backlighting — 11132630

Sensors

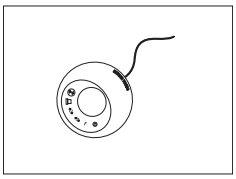

ErgoSens, optical sensor for hands-free operation	11132601

Barcode reader

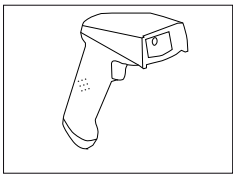

RS232C Barcode Reader		21901297
The following accessories are needed for operation (not included):		
	RS232 F cable	21901305
	Null modem adapter	21900924
Plus one of the following:	AC adapter 5 V for EU	21901370
	AC adapter 5 V for US	21901372
	AC adapter 5 V for GB	21901371
	AC adapter 5 V for AU	21901370 + 71209966

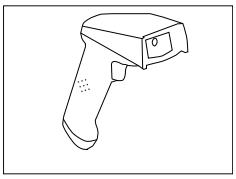

RS232C Barcode Reader – Cordless		21901299
The following accessories are needed for operation (not included):		
	Cradle	21901300
	RS232 F cable	21901305
	Null modem adapter	21900924
Plus one of the following:	AC adapter 12 V for EU	21901373
	AC adapter 12 V for US	21901375
	AC adapter 12 V for GB	21901374
	AC adapter 12 V for AU	21901373 + 71209966

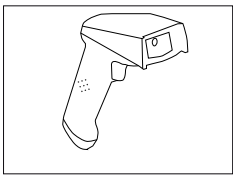

PS/2 Barcode Reader, without cable	21901297
PS/2 wedge single cable	21901307

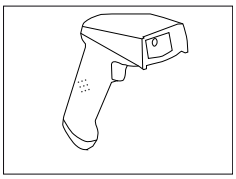

PS/2Y Barcode Reader, without cable	21901297
PS/2 wedge twin (Y) cable	21901308

Anti-theft devices

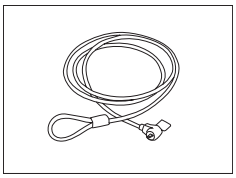

Steel cable	11600361

Protective covers

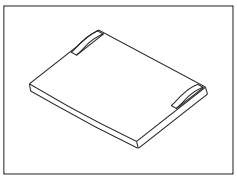

Protective cover for XP terminal 11132570

Software

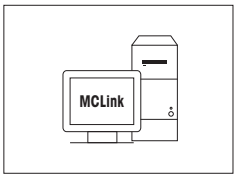

MCLink mass comparator control software 11116504

MCLink software – a simple and practical tool for carrying out your mass measurements to a high level of efficiency. MCLink is the ideal tool for facilities from small calibration laboratories up to scientific mass laboratories Reports are generated safely end efficient with direct control of the comparators with one click.

Draft shields

Draft shield to cover the entire balance "XP-W64" 11134470
550 × 470 × 580 mm (W × D × H), "L" platform

Reference weights

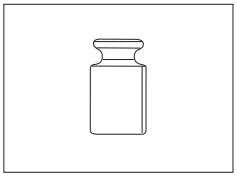

Reference weight, 20 kg (E1), certified 00159221

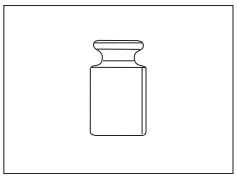

Reference weight, 50 kg (E1), certified 00159231

Climatic measurement station

Klimet A30 certified Includes: 00222012
1 sensor for air temperature, 1 sensor for air pressure, 1 sensor for relative humidity

Klimet A30 not certified Includes: 00222011
1 sensor for air temperature, 1 sensor for air pressure, 1 sensor for relative humidity

	Temperature sensor (with 5 m cable)	00222014
	Temperature sensor (with 2.5 m cable)	00222013

Various

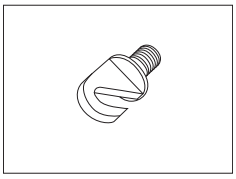	Hook for the hanger (depending on the model), "M" and "L" platform	11132565
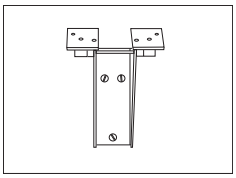	Wall fixture for terminal	11132665
	Terminal stand for placement of the terminal 30 cm above the weighing pan, "L" platform	11132653

10.2 Spare parts

Various

	Pos	Description	Part No.
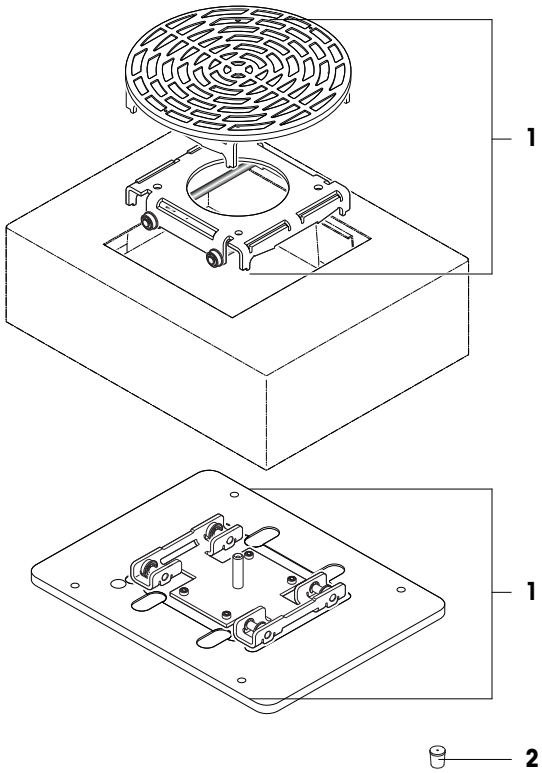	**LevelMatic XP26003L, XP64003L**		
	1	LevelMatic complete	11120415
	2	Pan support LevelMatic	11120418
		Update set XP-L std to LevelMatic weighing pan	30007868
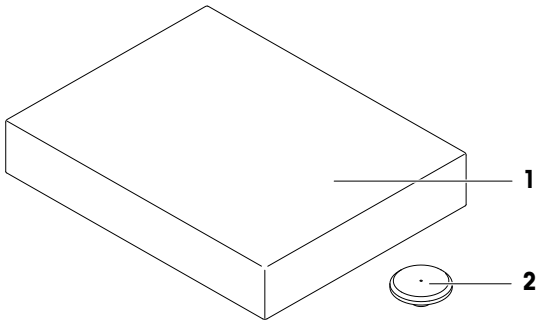	**Weighing pan XP32003L, XP64002L**		
	1	Weighing pan 32 kg	00239105
		Weighing pan 64 kg	11102124
	2	Pan support for standard weighing pan	00239104
		Update set XP-L LevelMatic to std weighing pan	30007869
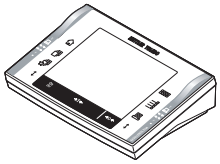		XP Terminal complete with firmware	11130837

Packaging

Pos	Description	Part No.
XP32003L, XP64002L		
1	Packaging complete	11132909
2	Export box	11132912
XP26003L, XP64003L		
1	Packaging complete	11120461
2	Export box	11120444

11 Appendix

11.1 MT-SICS interface commands and functions

Many of the instruments and balances used have to be capable of integration in a complex computer or data acquisition system.

To enable you to integrate balances in your system in a simple manner and utilize their capabilities to the full, most balance functions are also available as appropriate commands via the data interface.

All new METTLER TOLEDO balances launched on the market support the standardized command set "METTLER TOLEDO Standard Interface Command Set" (MT-SICS). The commands available depending on the functionality of the balance.

For further information please refer to the Reference Manual MT-SICS downloadable from the Internet under

▶ http://www.mt.com/comparators

Index

GWP® – Good Weighing Practice™

The global weighing guideline GWP® reduces risks associated with your weighing processes and helps to

- choose the appropriate balance
- reduce costs by optimizing testing procedures
- comply with the most common regulatory requirements

▶ www.mt.com/GWP

www.mt.com/comparators

For more information

Mettler-Toledo AG, Laboratory Weighing
CH-8606 Greifensee, Switzerland
Tel. +41 (0)44 944 22 11
Fax +41 (0)44 944 30 60
www.mt.com

Subject to technical changes.

11780871A en

* 1 1 7 8 0 8 7 1 *