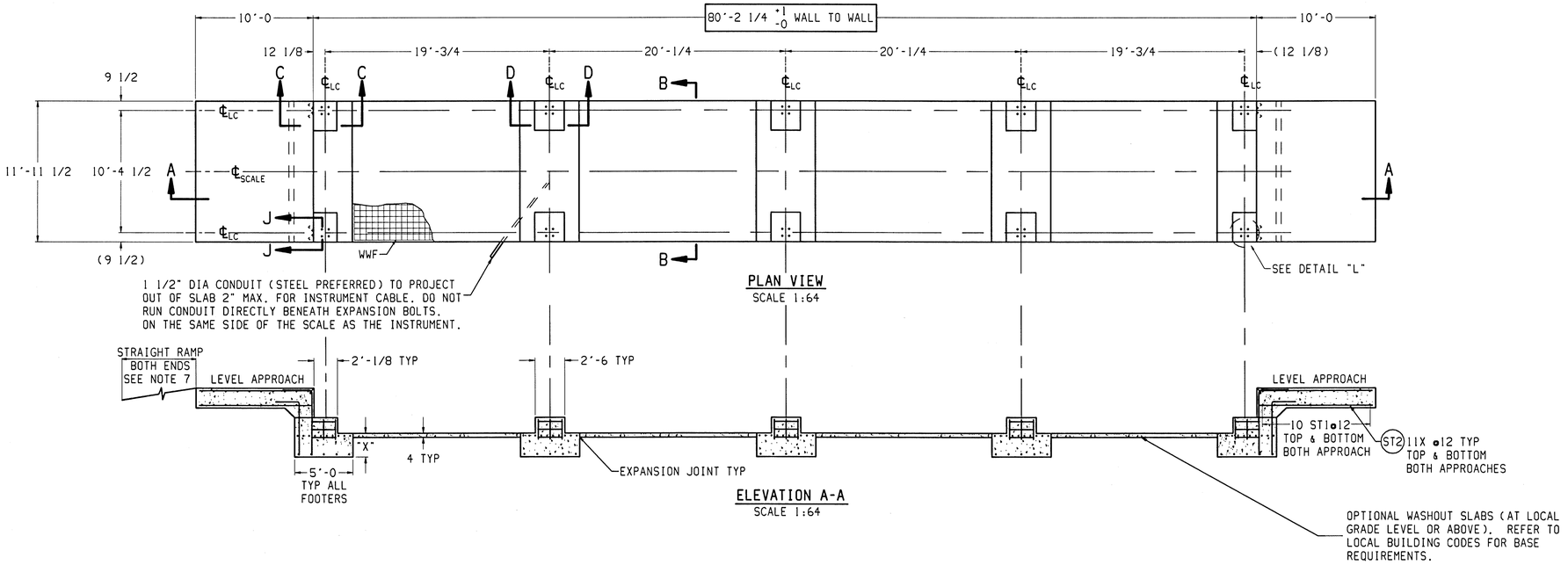

REINFORCING STEEL SCHEDULE (A.S.T.M. A-615 GRADE 60)						
COLD FORM BARS TO INSIDE DIMENSIONS				A B		
SYM	QTY	SIZE	LOCATION, DIRECTION	A	B	WGT
ST1	75	#6	FOOTERS, LATERAL	11'-5		1286
	42		APPROACHES, LATERAL			720
ST2	44	#5	APPROACHES, LONG.	9'-6		436
ST3	80	#4	PIER VERT.	1'-8		89
L1	22	#5	APPROACH TO END TIES	2'-0	4'-6	149
L2	22	#5	APPROACH TO END TIES	2'-6	5'-6	184
T1	30	#5	(SEE DETAIL ITEM T1)	9'-0		282

MATERIAL SUMMARY* (INCLUDES FOOTERS & APPROACHES)	FOOTER DEPTH: "X" INCHES (24 INCH MINIMUM)				
	24	36	48	60	72
CONCRETE (CU. YDS.)	44	55	66	77	88
REINFORCING STEEL (LBS)	3146				

*IF OPTIONAL WASHOUT SLABS ARE USED, ADD:
700 SQ. FT. OF WWF: 6x6_W1.4xW1.4
9 CU. YD. OF CONCRETE
96 FT. OF EXPANSION JOINT.

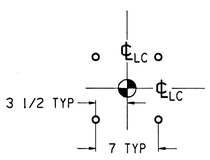

DETAIL "L"
SCALE: 1:8
EXPANSION BOLT LOCATIONS
SEE NOTE 7

DIMENSIONS SHOWN ARE FOR REFERENCE ONLY. SPACE REBAR TO AVOID EXPANSION BOLTS (SHOWN FOR REFERENCE. SUPPLIED BY METTLER TOLEDO.) USE LATERAL BUMPER AS A TEMPLATE TO LOCATE AND DRILL HOLES AFTER SCALE HAS BEEN CORRECTLY POSITIONED. TYPICAL ALL BUMPER LOCATIONS.

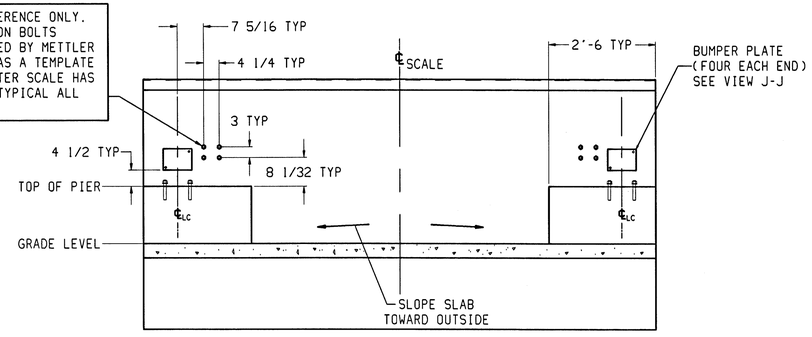

SECTION B-B
SCALE: 1:20

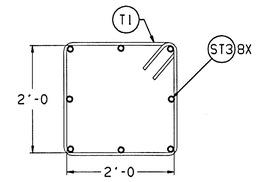

DETAIL ITEM T1
SCALE: 1:16
USED AT EACH PIER

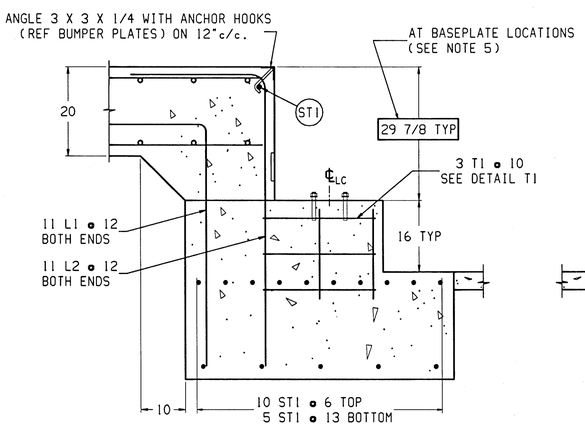

SECTION C-C
SCALE 1:16
(TYPICAL END)

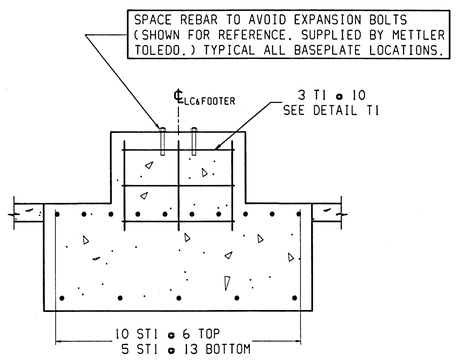

SECTION D-D
SCALE 1:16
(TYP MIDDLE FOOTER)

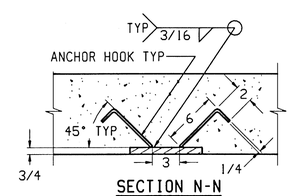

SECTION N-N

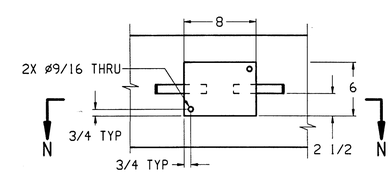

VIEW J-J
SCALE: 1:8
BUMPER PLATE ASSY'S: TWO EACH END
MATERIAL: H.R. STEEL
SEE NOTE 11

NOTES:

1) USE MINIMUM 4000 PSI STRENGTH CONCRETE AT 28 DAYS WITH 5-7% AIR ENTRAINMENT.
2) USE MINIMUM 60KSI YIELD DEFORMED REINFORCING STEEL.
3) FOUNDATION REQUIRES 2500 PSF RATED SOIL.
4) MINIMUM DEPTH OF COVER FROM THE SURFACE FOR REBAR IS 2". HOWEVER, IN PLACES WHERE THE SURFACE IS IN CONTACT WITH THE GROUND, REBAR COVER SHOULD BE A MINIMUM OF 3".
5) TOP OF CONCRETE AT BASEPLATE LOCATIONS TO BE LEVEL AND IN ONE PLANE ±1/8"
6) DIAGONAL MEASUREMENTS ENDWALL TO ENDWALL MUST BE EQUAL WITHIN 1/2".
7) EXPANSION BOLTS USED TO ANCHOR BASEPLATES, TO BE SUPPLIED BY METTLER TOLEDO. USE BASEPLATES AS TEMPLATES TO LOCATE EXPANSION BOLTS DURING SCALE INSTALLATION.
8) RAMP LENGTH: -PER LOCAL REGULATIONS
   -1/2" SLOPE PER FOOT TYPICAL
9) BOTTOM OF FOOTERS MUST BE BELOW LOCAL FROSTLINE. IF LOCAL FROSTLINE IS UNKNOWN, REFER TO DRAWING TA201033 (U.S. WEATHER BUREAU FROST PENETRATION AVERAGES).
10) OPTIONAL: 6" OF GRAVEL MAY BE USED UNDER FOUNDATION TO IMPROVE DRAINAGE. REFER TO LOCAL BUILDING CODES FOR BASE REQUIREMENTS.
11) CONTRACTOR SUPPLIES:
   -EXCAVATION
   -REINFORCING STEEL
   -CURB ANGLE ASSEMBLIES (SECT C-C)
   -CONCRETE AND FORMS
   -1 1/2" DIA CONDUIT
   -BUMPER PLATE ASSEMBLIES (8 PCS TOTAL) (VIEWS J-J & N-N)

REV	CHANGE	BY	DATE

SCALE .015625
DATE 5/18/99
DRN SEH APPD
TITLE 7566, FOUNDATION, VARIABLE FOOTER, 80' SINGLE WIDE, 11'10

UNLESS OTHERWISE SPECIFIED, ALL DIMENSIONS ARE IN INCHES, AND DIMENSIONAL TOLERANCES ARE:
FRACTIONAL ±1/32 DECIMAL .XX ±.02 .XXX ±.005 ANGULAR ±.5°

METTLER TOLEDO

THIS PRINT IS FURNISHED WITH THE UNDERSTANDING THAT THE ESSENCE THEREOF WILL NOT BE REPRODUCED IN WHOLE OR IN PART WITHOUT WRITTEN AUTHORIZATION OF METTLER-TOLEDO, INC. ALL DESIGNS ARE THE PROPERTY OF METTLER-TOLEDO, INC. AND WILL BE PROTECTED BY PATENTS.

TC204007 REV