72200427A

Model	Capacity	Dimensions And Locations														
		L	L1	L2	L3	L4	L5 (3)	H	H1	H2	T	W	W1	W2	W3	Deflection (6)
MT1241	ALL	150 [5.91]	6.3 [0.25]	25.4 [1.00]	86.6 [3.41]	25.4 [1.00]	38 [1.50]	38 [1.50]	12 [0.47]	29 [1.14]	M6	38 [1.00]	6.3 [0.25]	25.4 [1.00]	6 [0.24]	0.3 [0.012]
SSP1241															7 [0.28]	0.25 [0.010]

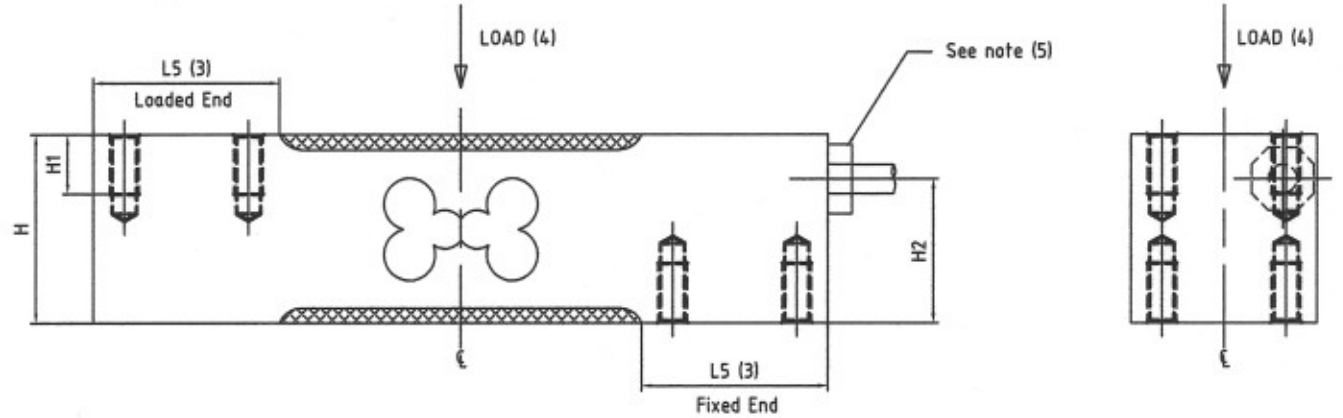

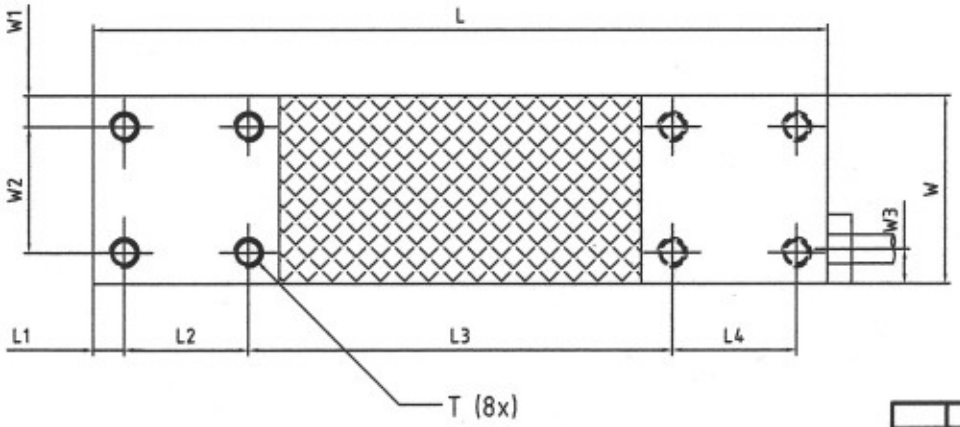

Notes:

(1) Dimensions are in mm [inches].
(2) Standard cable length is 2m (6.6ft).
(3) Spacer/mounting surface length.
(4) Ideal loading & platter-center point on this axis.
(5) Cable-entry fitting on SSP1241 only.
(6) Nominal deflection at Rated Capacity (Emax).
(7) Nominal cable diameter =5.8 [0.23].

Cable termination
+Exe: Green -Exe: Black
+Sig: Red -Sig: White
+Sen: Blue -Sen: Brown
Shield: Yellow(long)

版本/VER	更改号/ER.ECN.NO.	更改人/BY	日期/DATE	阶段/STAGE	SP	重量/WGT	比例/SCALE	METTLER TOLEDO MTCN / MTCZ
设计/DRN	汤建华	批准/APPD		S A	Y		1:1	MT/SSP1241 Gen.Dim.
审核/CHECK	钱雪平	认证/AGEN						72200427A
工艺/MFG	刘强	日期/DATE	2006-10-23	SHEET: 第 1 页 of 共 1 页				